• ZEMİN RAYLI ÇAMAŞIR SEPETİ MONTAJ ŞEMASI
• LAUNDRY BASKET WITH UNDERMOUNT RAIL MOUNTING INSTRUCTIONS

STARAX®

A-1

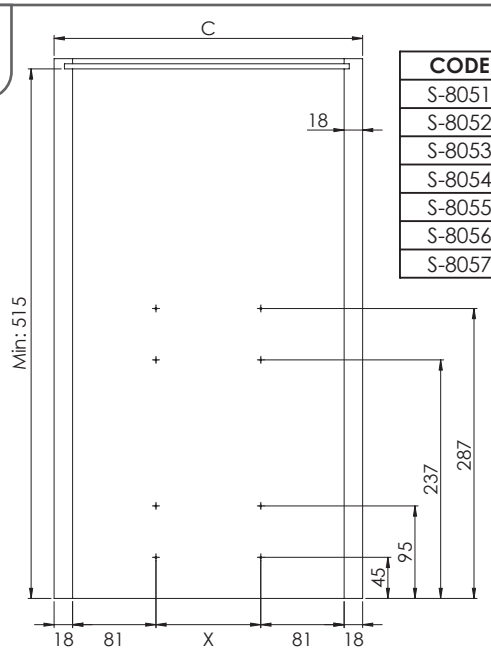

CODE	C	X
S-8051	300	102
S-8052	350	152
S-8053	400	202
S-8054	450	252
S-8055	500	302
S-8056	550	352
S-8057	600	402

B-1

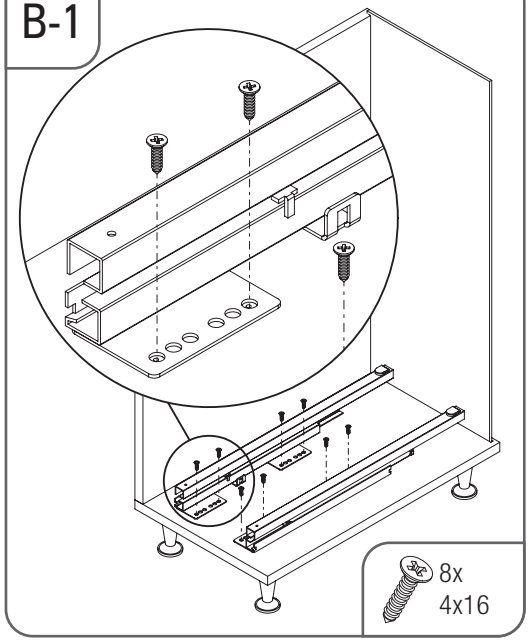

8x
4x16

C-1

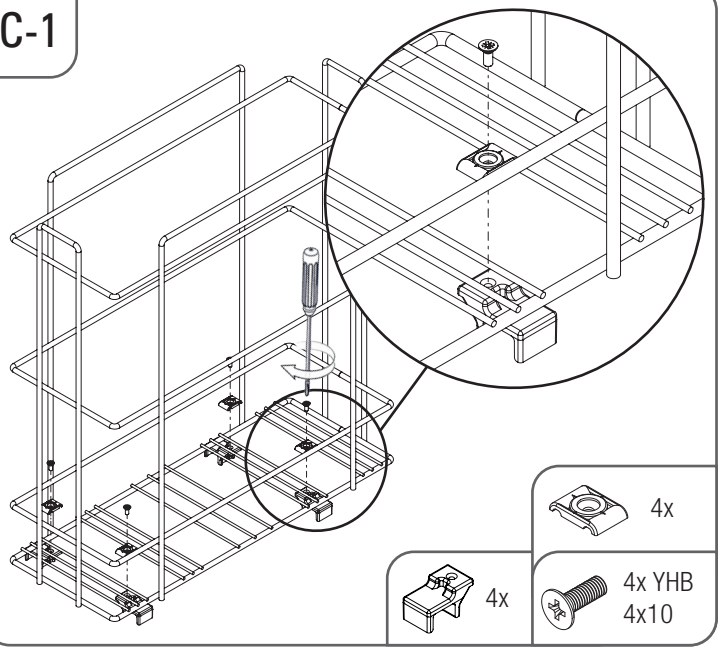

4x

4x

4x YHB
4x10

D-1

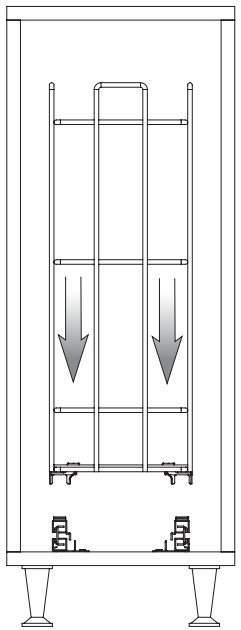

E-1

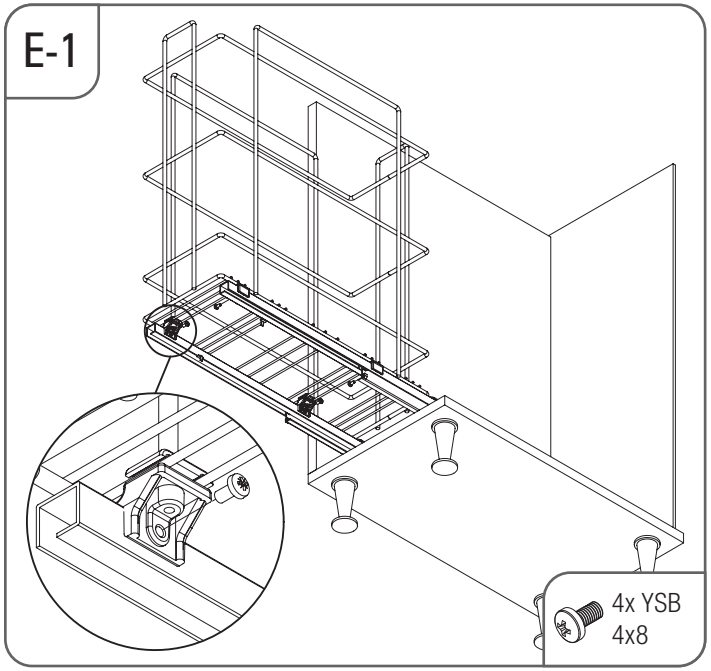

4x YSB
4x8

F-1

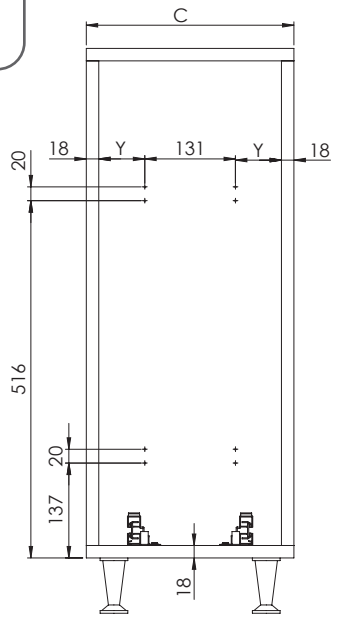

CODE	C	Y
S-8051	300	66,5
S-8052	350	91,5
S-8053	400	116,5
S-8054	450	141,5

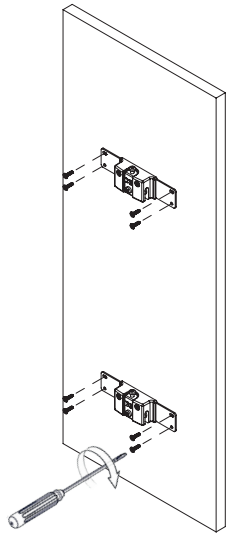

8x
4x16

57646

- ZEMİN RAYLI ÇAMAŞIR SEPETİ MONTAJ ŞEMASI
- LAUNDRY BASKET WITH UNDERMOUNT RAIL MOUNTING INSTRUCTIONS

STARAX®

G-1

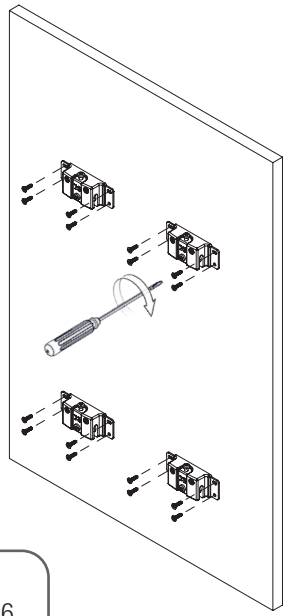

16x
4x16

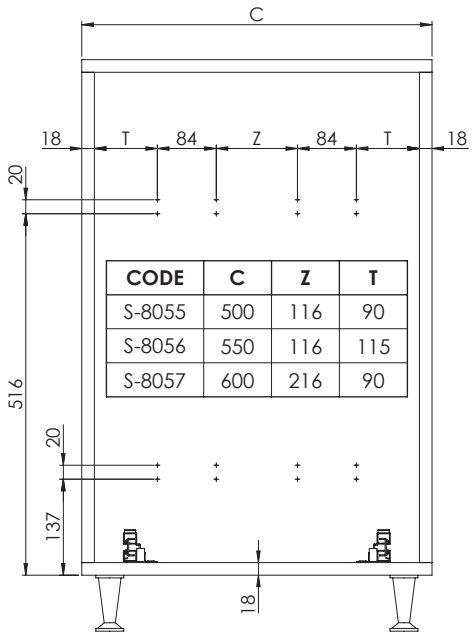

CODE	C	Z	T
S-8055	500	116	90
S-8056	550	116	115
S-8057	600	216	90

H-1

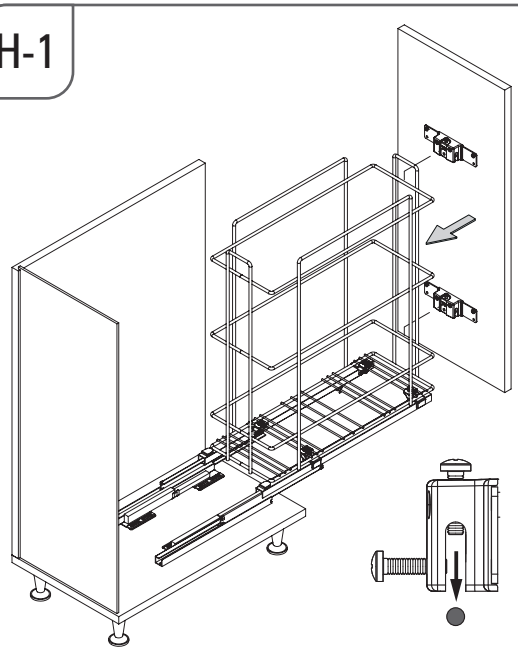

J-1

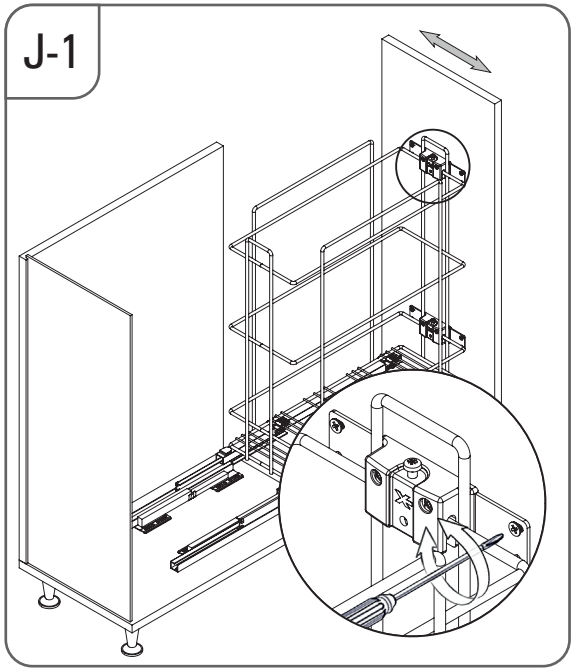

K-1

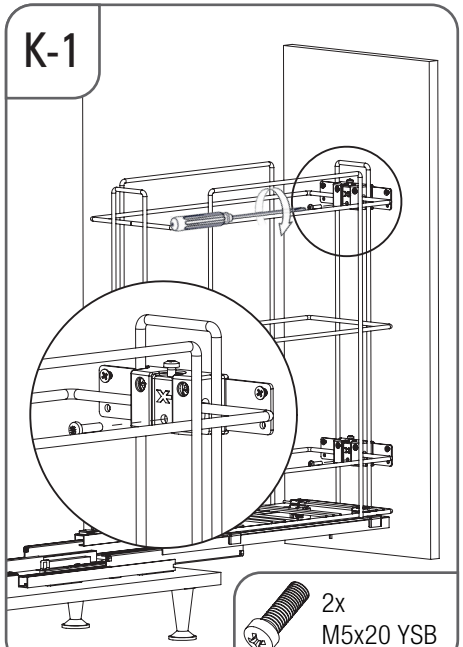

2x
M5x20 YSB

L-1

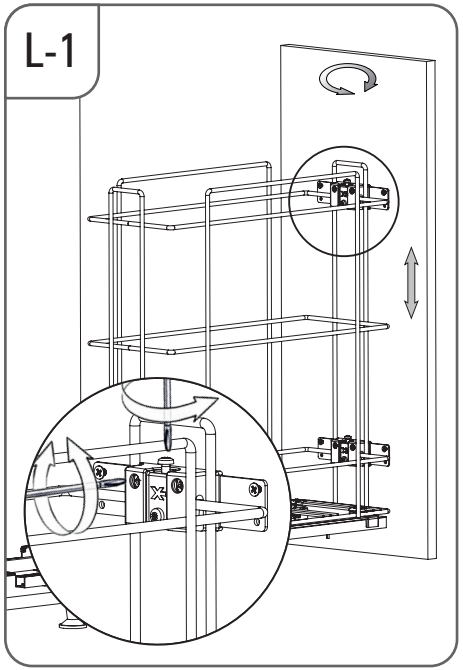

M-1

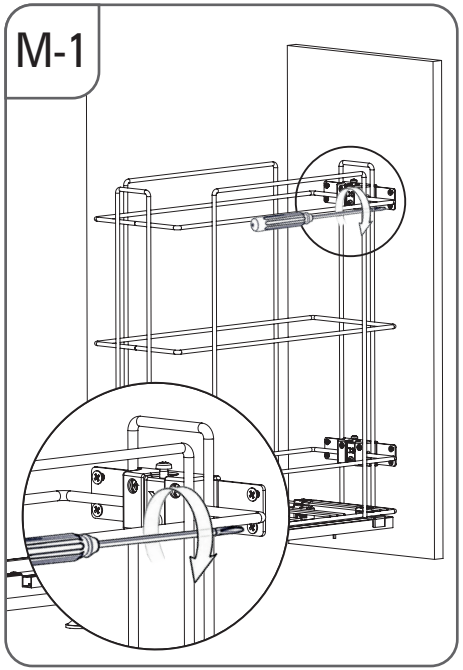

N-1

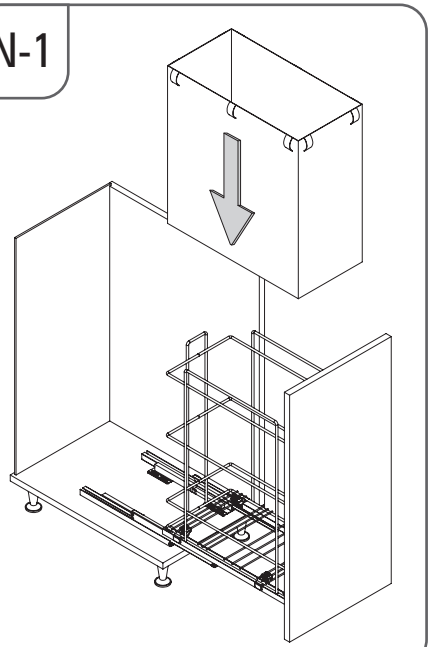

PDF

57646